Global Ocean Monitoring and Observing
NATIONAL OCEANIC & ATMOSPHERIC ADMINISTRATION

# Emerging Technology - Advancing Technologies to Improve Ocean Monitoring

Christian Meinig, Scott Stalin, Noah Lawrence, Steven Anderson (CICOES), Nick Delich, Dirk Tagawa, Mike Craig, Sean O'Neill,
& many scientists
NOAA
Pacific Marine Environmental Lab

mclanelabs.com

SAILDRONE

# Developing Emerging Technology for Ocean Observing Research

- Vision: To engineer cost effective platforms and sensors to deliver high quality EOV, ECV at global scale

- GOMO provides critical funding to advance promising technologies into ‘fit for purpose’ scientific tools that informs policy and improves livelihoods

Example: Saildrone Observations(~6yrs)

Tropical Pacific


US Arctic


*GOMO Investments: Emerging Tech Demonstration*

# Developing Emerging Technology for Ocean Observing Research

- Critical funding to engineering promising technologies into ‘fit for purpose’ scientific tools that inform policy and improve livelihoods
- Unique role of federal research labs/programs that have a long lever on the arc of system development to improve quality, relevance and performance of obs systems
- Close collaboration of scientists and engineers to systematize platform/ sensor development for EOVs, ECVs

TPOS-Saildrone

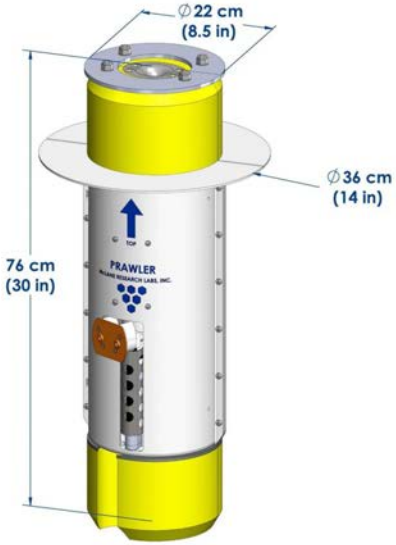


**NOAA-PMEL PRAWLER**
**Mooring Profiler**
(wave energy propelled)

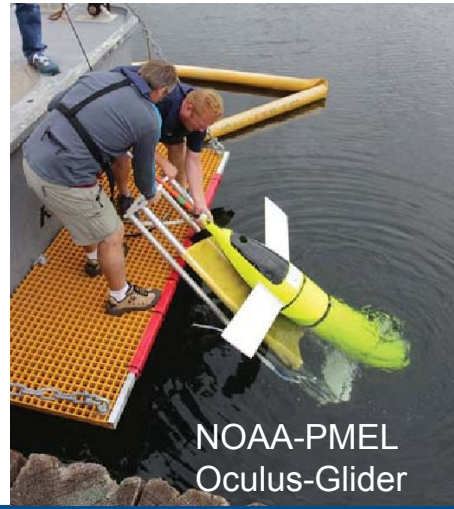
NOAA-PMEL
Oculus-Glider

# GOMO Link: Sustained Funding

TPOS-Saildrone

<u>Saildrone: Arctic+TPOS</u>

-Field missions in the Tropics(5 yrs) and Arctic(3 yrs) focused on scientific demonstration missions

-CRADAs(2)

-Transition Plans underway(4)

<u>PRAWLER+TELOS: Tropics-to-Arctic Testing & Development</u>

-CRADAs(2), Commercialization

<u>Oculus: Arctic: Engineer new buoyancy engine</u>

-CRADA(1), Partnership(UW & UW-APL), Kongsberg

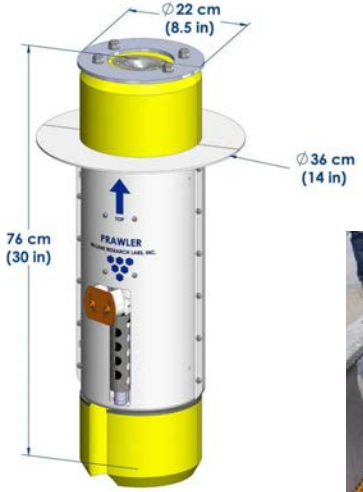

PRAWLER Mooring Profiler

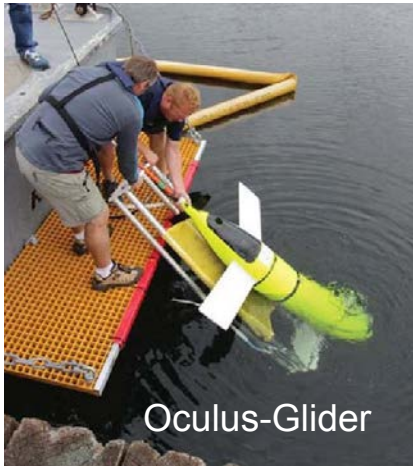
Oculus-Glider

# Saildrone Development: GOMO support at critical time

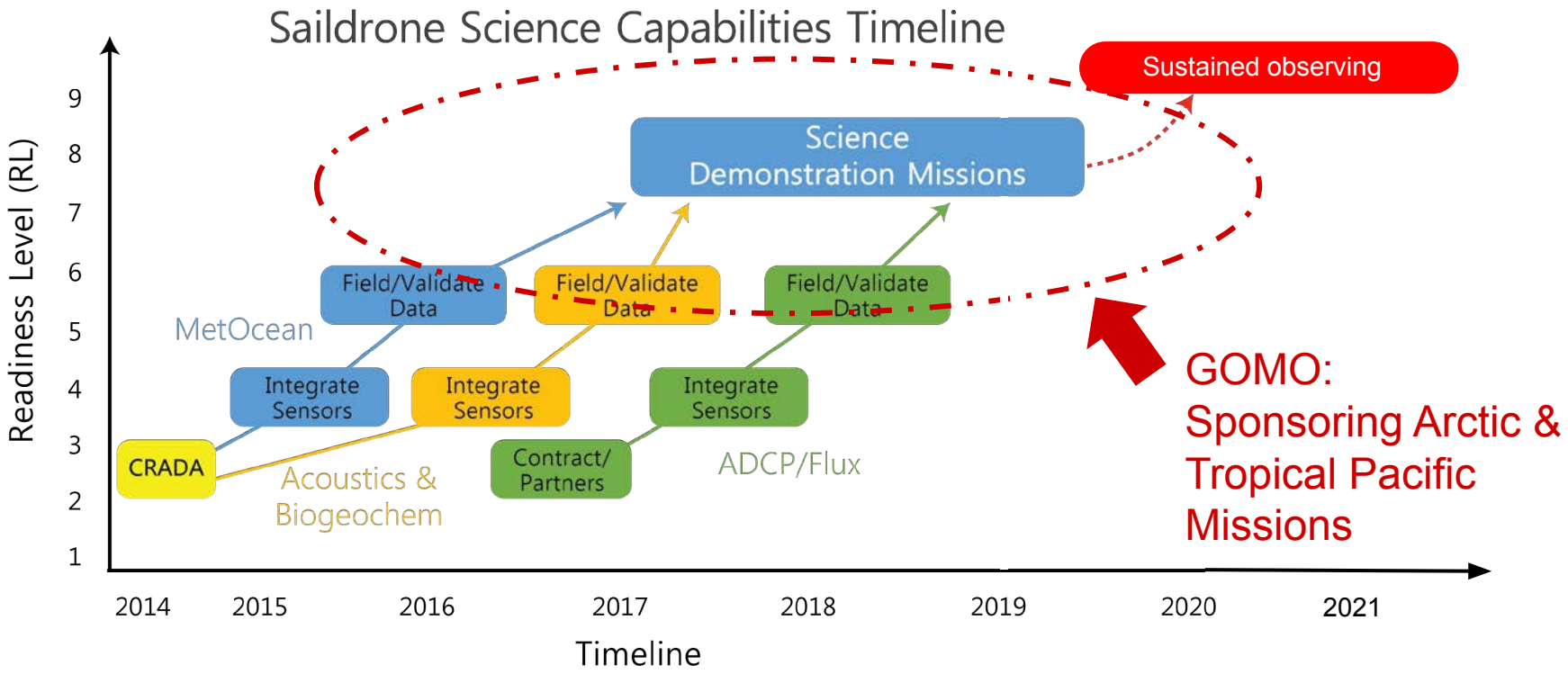

# Saildrone: Science Demonstration Mission Impacts

- 5 TPOS & 3 Arctic Missions
- >10 peer reviewed publications
- 4 Transition Plans covering ~14 EOV, ECVs
- >$300M investment to date from private capital

Pioneered methods/techniques of validating and field testing climate quality sensors on USVs thru PPPs.

Meinig et al, 2019

# Mooring PRAWLER (PRofiler+crAWLER)
## (Performance Example)

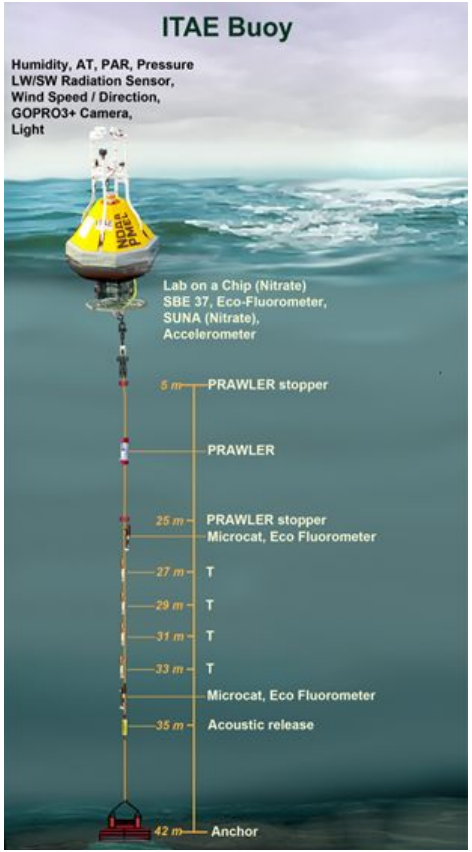


Nielsen (EcoFOCI/ABL NRC Assoc), Eisner (ABL), Mordy (UW/PMEL), Lomas (Bigelow), Juranek (OSU), Stabeno, Stalin, Meinig (PMEL)

Ecosystem PRAWLER at M2 provided estimates of primary production filling a long-standing science gap in one of the largest fisheries in the US.

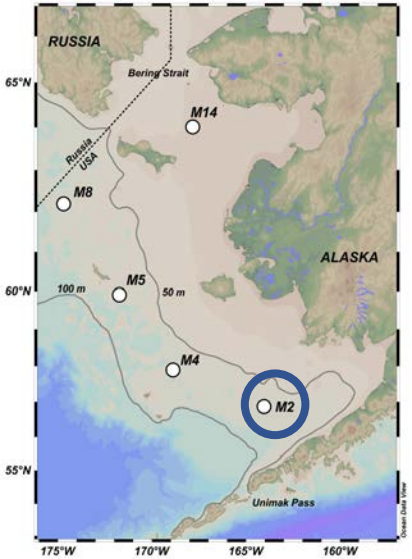


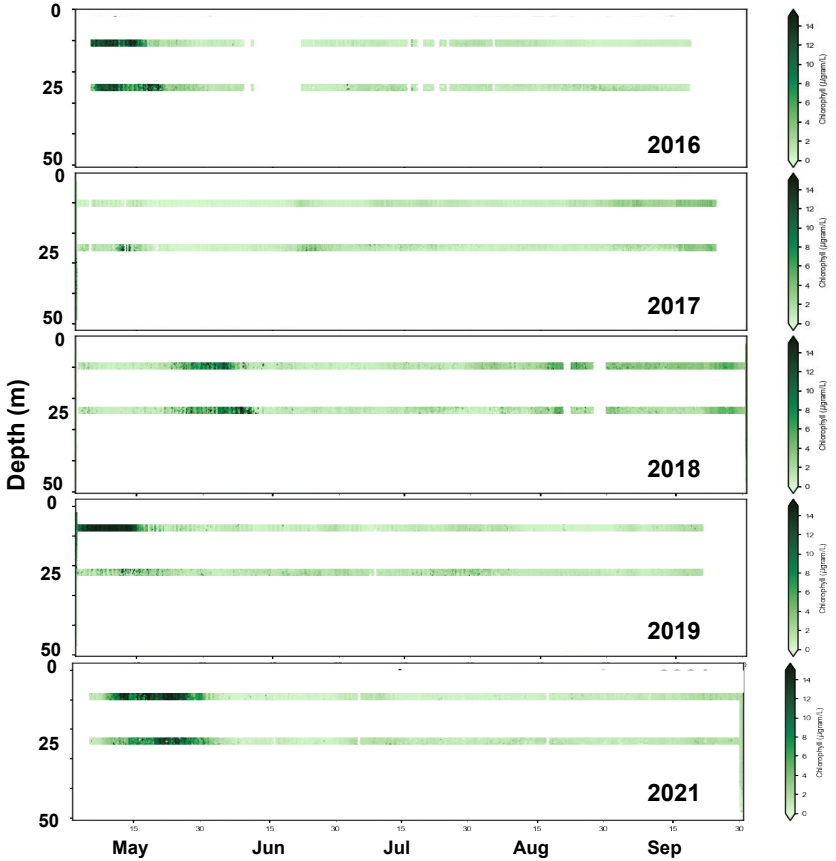


Conventional instrument spacing

# Mooring PRAWLER (PRofiler+crAWLER)
## (Performance Example)

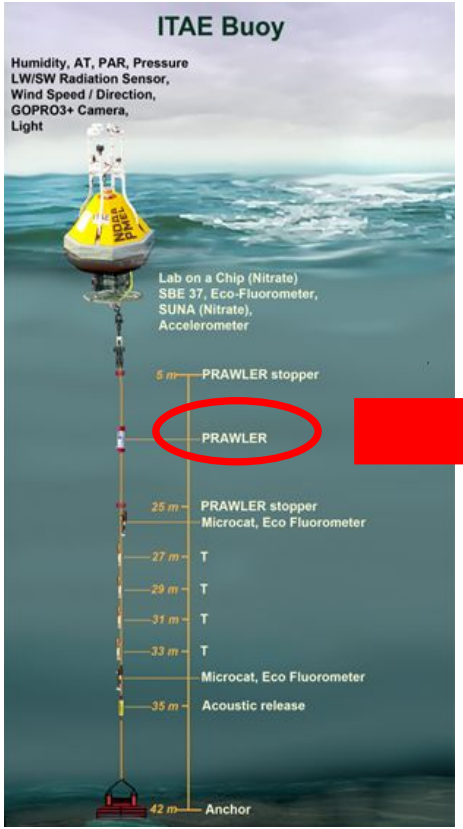


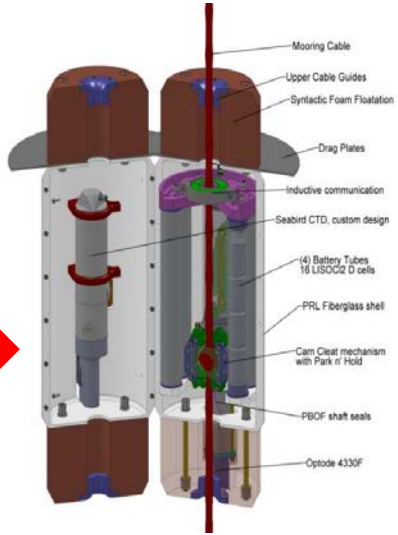


PMEL Design/Build

Improved resolution by hourly profiles

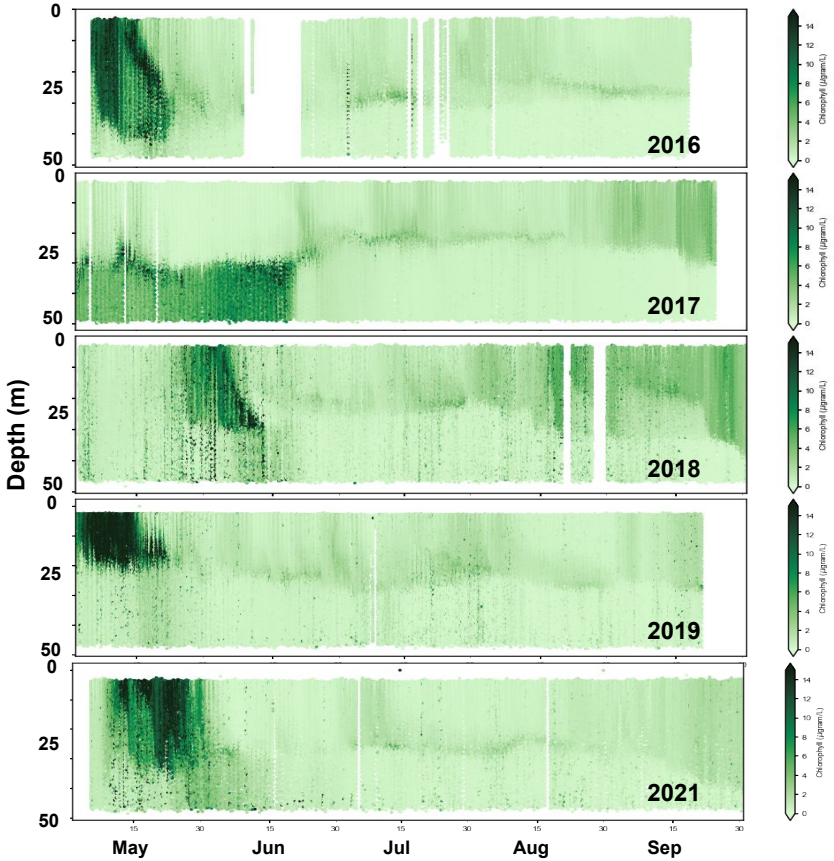


Profile

Nielsen (EcoFOCI/ABL NRC Assoc), Eisner (ABL), Mordy (UW/PMEL), Lomas (Bigelow), Juranek (OSU), Stabeno, Stalin, Meinig (PMEL)

# Saildrone: Science Demonstration Mission Impacts

<u>USVs ready for GOOS</u>
<u>(caution on sensors & data!)</u>

- Globally, >12 USVs operate commercially in the open ocean at RL 7-8.
- Climate quality sensors could be added per NOAA lessons on methods/techniques, comparisons, etc


Outcome:

**Uncrewed Surface Vehicle Network**
**for a remote, data-limited**
**Global Ocean Observing System**

***Update on an emerging network for OCG***

**Ruth Patterson**[*,1], **Meghan Cronin**[2], Adrienne Sutton[2], Eugene Burger[2], Jack Reeves Eyre[*,3], Dongxiao Zhang[4], Jim Thomson[5], Sebastiaan Swart[6], Marcel du Plessis[*,6], Tom Farrar[7], Luc Lenain[8], Laurent Grare[8], Iwao Ueki[9], Samantha Wills[*,4], Chris Meinig[2], Jaime Palter[10], Eric Lindstrom[11], Sarah Nicholson[*,12], Pedro Monteiro[12]

# Achievements and Impacts

A USV network **FILL GAPS** in space, time, disciplines and complement existing GOOS infrastructure

## SPACE AND TIME

- **Remote locations** of global ocean not currently covered by GOOS infrastructure**, including semi-enclosed seas, gulfs, archipelagos** and **reef networks**
- **Under persistent cloud cover** that can obscure some satellite observations
- **Clusters of USV** that periodically come together to form **"Mesonet"**, then spread apart for greater coverage
- Pairs of USV, in loose **follow-the leader** or **side-by-side formation** to observe EOV and spatial gradient

## DISCIPLINARY

- **In severe weather and developing phenomena**
- In **frontal** regions, **and near ice edge**
- In **process studies**
- **Air-Sea interface studies at sub meter scale**

## COMPLEMENTARY

- **Spatiotemporal coverage** around **fixed point moorings**
- **Air-sea surface surveys** at **subsurface moorings or glider profiles**
- **Acoustic gateway** data transfers

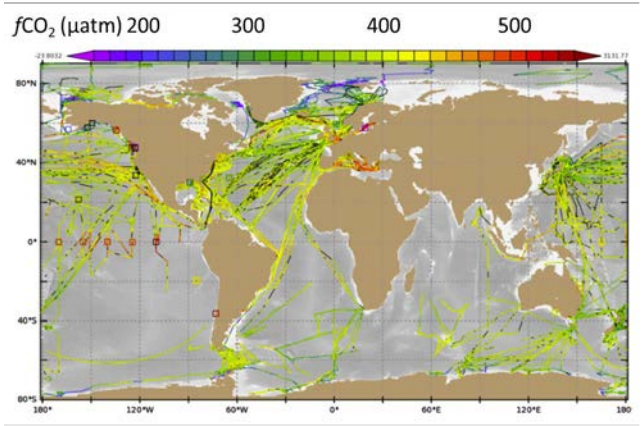


*All seawater $pCO_2$ observations made in 2015*

(From Patterson et al.)

# Challenges:

## Sustain funding is lacking for ‘operations’

- Gaps in methods of assessing & prioritizing obs
- Gaps in communicating the value of observations to range of stakeholders
- Limited NOAA capacity of data assimilation specialists to characterize impacts

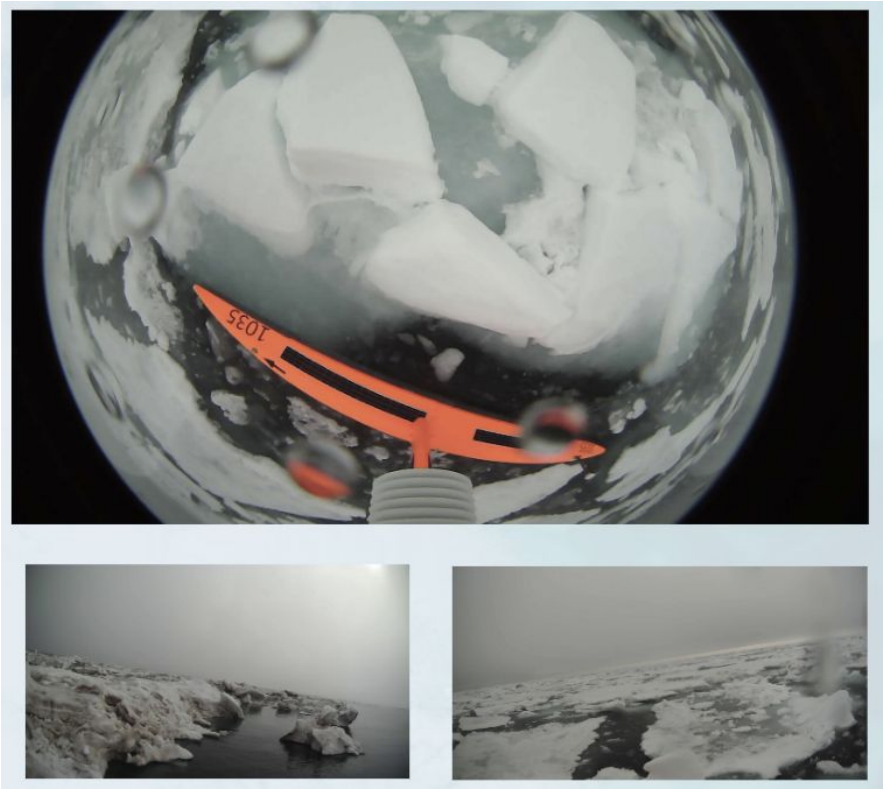

# Future plans and opportunities

*"Patchwork of potentiality, and a network of promise"*

***Eric Lindstrom***

- Next steps and future plans (next 5 years)
  - Grow from 'patchwork of projects' to a 'cohesive USV science network'
  - Develop a COP as UN Decade Project (OASIS)
  - Establish a USV Data Acquisition Center that serves unique user needs

- How will these future plans advance the ocean observing enterprising?
  - Proven track record of going from 'Ideation to Impact'
  - Sustainable, flexible, fit-for-purpose systems
  - Saildrones have proven to be ship-independant & responsive during COVID